TOR

Temperature Limited Override for Combination Fire Smoke Dampers

Application

The TOR is a closure and position indication device for combination fire smoke dampers. The TOR assembly includes two electric sensors (thermostats) with different fixed temperature settings that can be wired in series with the damper's actuator. The primary sensor is selected with the lower temperature setting – usually 165°F (74°C), and the secondary sensor is selected with the higher temperature setting – usually 350°F (177°C).

Once the initial specified temperature is reached, the primary sensor interrupts power to the actuator which causes the internal spring return mechanism to close the damper. The primary sensor can then be bypassed by an external electrical signal, allowing the damper to reopen and remain open until the temperature reaches the setting of the secondary sensor. When the temperature of the secondary sensor is exceeded, power is once again interrupted to the actuator and the damper then remains closed. The thermostats in the TOR eliminate the need for a fusible link that would be used on a traditional fire damper.

The electric sensors in the TOR may be manually reset after the temperatures have cooled down below the sensor set points. Before resetting any sensor, a careful inspection of the damper and sensor should be made as exposure to actual fire conditions may render these devices unusable.

The TOR assembly contains two single pole, single throw switches that are used to indicate damper blade position. One switch provides a positive signal when the damper blades are in the open position, while the other switch provides a positive signal when the damper is closed. These switches can be used in conjunction with remote indicator lights or a building automation system (furnished by others) to monitor damper blade position from a remote location. The TOR is commonly used in active smoke control applications to positively indicate the status of all smoke and combination fire smoke dampers in a building. The single pole, single throw switch assembly may also be used to provide a start/stop control circuit for remote fan installations.

Item#	Qty.	Description
1	1	TOR Switch Box
2	2	Pushnut retainer
3	1	Indicator Linkage
4	1	Blade Clip
5	1	4 x 4 in. handy box
6	4	Self-drilling Screws, HWH, #10-16x.5
7	1	4 x 4 in. cover plate
8	1	Label
9	1	Gasket

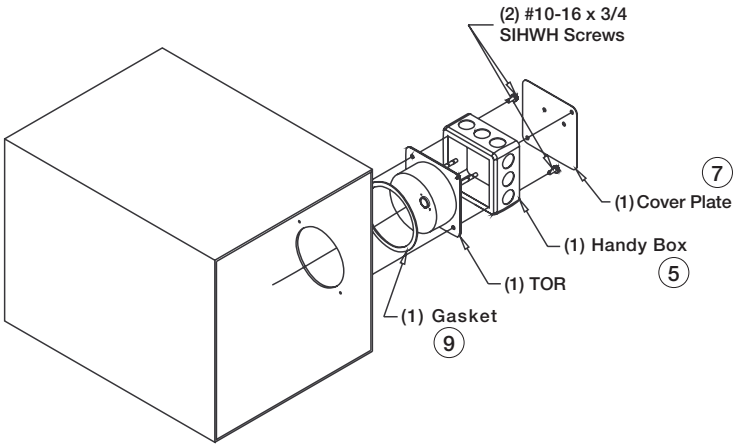

Note: In order to meet UL requirements, factory installation of the damper actuator and factory wiring of the electric sensor is required.

Temperature	TOR Field Kit Number
165°/250°F (74°C/121°C)	913960
212°/350°F (100°C/177°C)	914085
165°/350°F (74°C/177°C)	914083
212°/250°F (100°C/121°C)	914084

Temperature setting options are dependent on damper ratings.

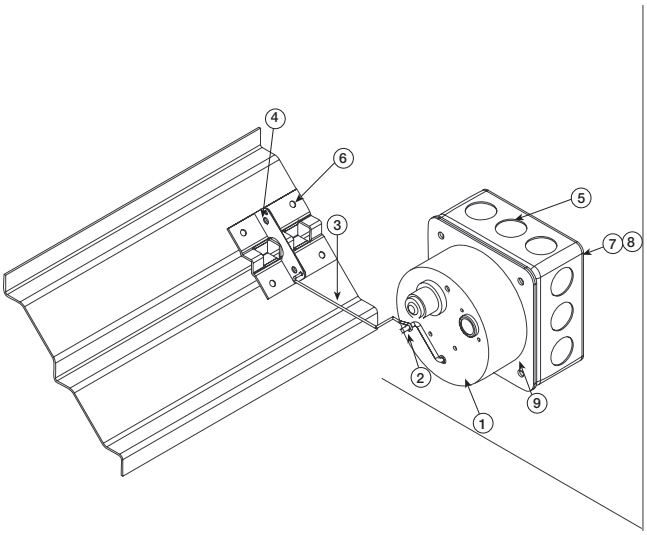

Ratings

Integral Switch Type: Single pole, double throw

Electrical: 15 Amps, ⅓ hp, 120 or 240 VAC
½ Amp, 120 VDC; ¼ Amp VDC
5 Amps, 120 VAC "L" (lamp load)
1.0 Amps, 24 VAC
1.5 Amps, 24 VDC

Temperature Limit: 165°F (standard primary sensor)
212°F (optional primary sensor)
250°F (secondary sensor)
350°F (secondary sensor)

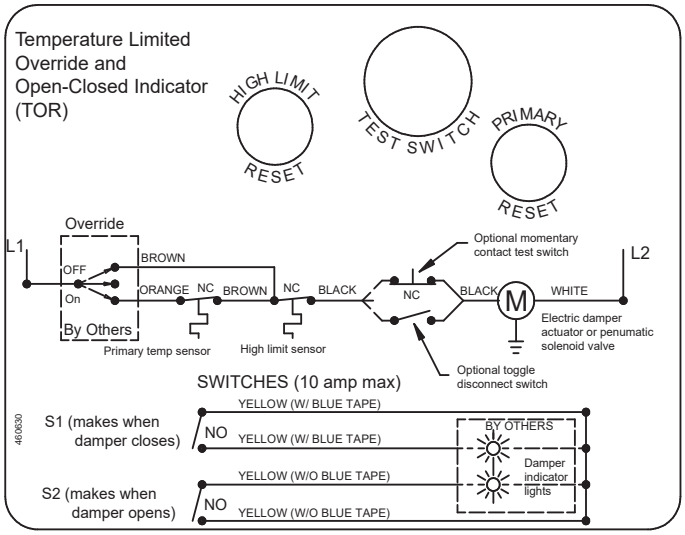

GREENHECK
P.O. Box 410 • Schofield, WI 54476-0410 • 715.359.6171 • greenheck.com

Copyright © 2026 Greenheck Fan Corporation
TOR, R20, March 2026
Greenheck Fan Corporation reserves the right to make product changes without notice.