Security Bars
for Dampers

Application

Installation of Greenheck security bars into damper sleeves reduces security risks but will also reinforce the equipment. Greenheck's use of security bars maintains the UL classification for all of their products when security bars are used. The standard product is welded into a 10 ga. (3.5 mm) sleeve.

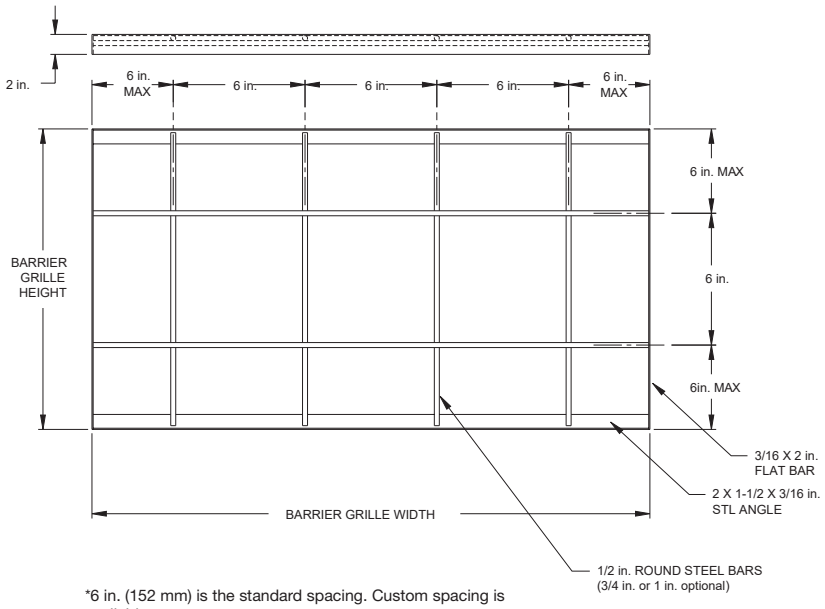

*6 in. (152 mm) is the standard spacing. Custom spacing is available.

Standard Construction	
Frame	Steel construction. Horizontal sides of frame are 2 in. x 1½ in. x 3⁄16 in. (51 mm x 38 mm x 5 mm) steel angle. Vertical sides are 3⁄16 in. x 2 in. (5 mm x 51mm) flat bar.
Vertical and Horizontal Bars	½ in., ¾ in., or 1 in. (1 3mm,19 mm, or 25 mm) round steel bars. Bars are placed on 6 in. (152 mm) center-to-center dimensions both horizontally and vertically (standard). All bar intersections are welded.
Finish	Prime painted after assembly

Frame Options

Special Design Request (SDR's) are available regarding construction. Consult the factory with any questions.

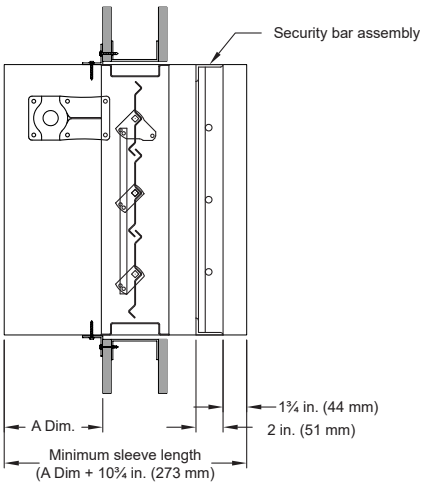

VCD Application

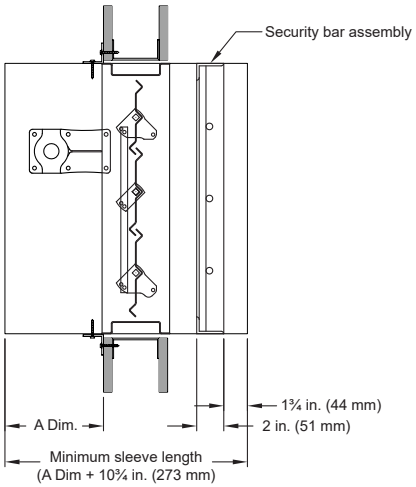

FSD/SMD Application
also DFD-210, DFDAF-310 and 330

P.O. Box 410 • Schofield, WI 54476-0410 • 715.359.6171 • greenheck.com

Copyright © 2026 Greenheck Fan Corporation
Security Bars, R14, January 2026
Greenheck Fan Corporation reserves the right to make product changes without notice.