HCDR-050

Round Industrial Control Damper

Application

Model HCDR-050 is a light duty round control damper with a flanged style frame. It is designed to control airflow and provide shut off in HVAC or industrial process control system.

Ratings

Velocity
Up to 3000 fpm (15.2 m/s)
Pressure
Up to 6 in. wg (1.5 kPa) - differential pressure
Temperature
-40° to 250°F (-40° to 121°C)

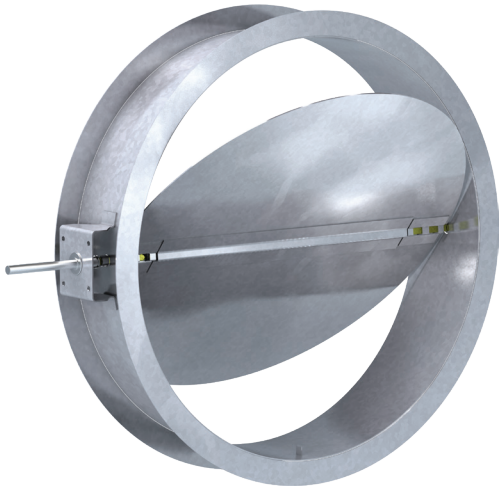

* Diameter = Actual Inside Dimension

Construction

	Standard	Optional
Frame Material	Galvanized steel	304SS, 316SS
Frame Type	Flanged channel	-
Frame Thickness	14 ga. (2 mm)	-
Blade Material	Galvanized steel	304SS, 316SS
Blade Seals	None	EPDM
Blade Stop	Pin stop	-
Blade Type	Round butterfly	-
Blade Thickness	14 ga. (2 mm)	-
Axle Bearing	Stainless steel sleeve	-
Axle Diameter	⅜ in. (9.5 mm)	-
Axle Material	Plated steel	316SS
Axle Seals	None	-
Paint Finishes	Mill finish	Hi Pro Polyester
Mounting Holes	None	On centerline, Straddle centerline

Diameter	Minimum Size	Maximum Size
Inches	6	24
mm	152	609

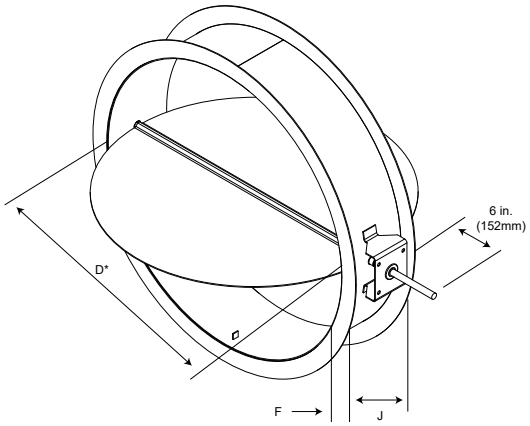

Features

- Wide mounting flanges can be ordered with bolt holes, customized to match your requirements.
- Wide range of actuators available.

Diameter D Inches (mm)		Frame Depth (J) (mm)	Flange Width F Inches (mm)
From	To		
6 (152)	12 (305)	6 (152)	1¼ (32)
12.001 (305)	24 (609)	8 (203)	1½ (32)

AMCA Test Figure 5.3

Figure 5.3 Illustrates a fully ducted damper. This configuration has low pressure drop because entrance and exit losses are minimized by straight duct runs upstream and downstream of the damper.

AMCA Test Figure 5.3

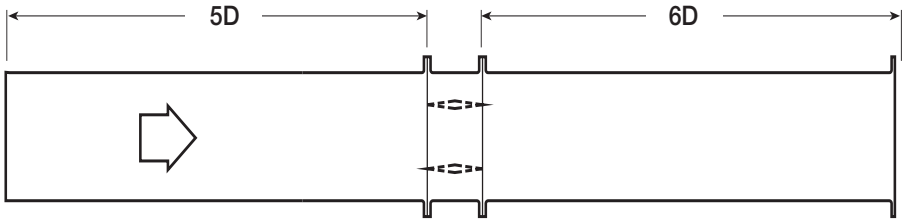

Pressure Drop Data

This pressure drop data was conducted in accordance with AMCA Standard 500-D using Test Figure 5.3. All data has been corrected to represent standard air at a density of 0.075 lb/ft^3 (1.2 kg/m^3).

Actual pressure drop found in any HVAC system is a combination of many factors. This pressure drop information along with an analysis of other system influences should be used to estimate actual pressure losses for a damper installed in a given HVAC system.

Leakage Data

Damper leakage (with blades fully closed) varies based on the type of blade stops and low leakage seals applied. HCDR-050 is available with no seals (standard) or with EPDM blade seal. Leakage testing was conducted in accordance with AMCA Standard 500-D and is expressed as cfm/ft^2 of damper face area. All data has been corrected to represent standard air at a density of 0.075 lb/ft^3 (1.2 kg/m^3).

Pressure Drop

12 in. (305 mm) Diameter Damper

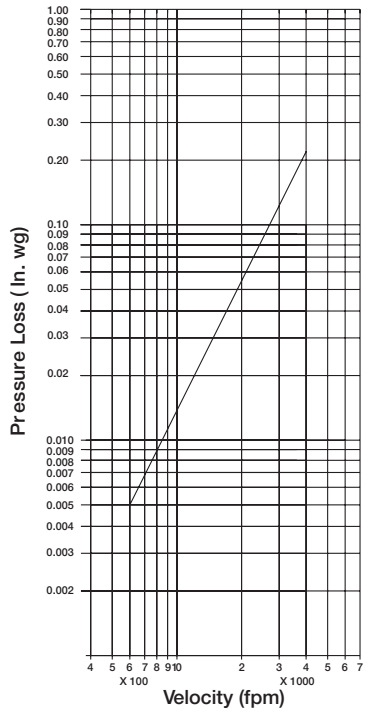

Leakage

12 in. (305 mm) Diameter Damper

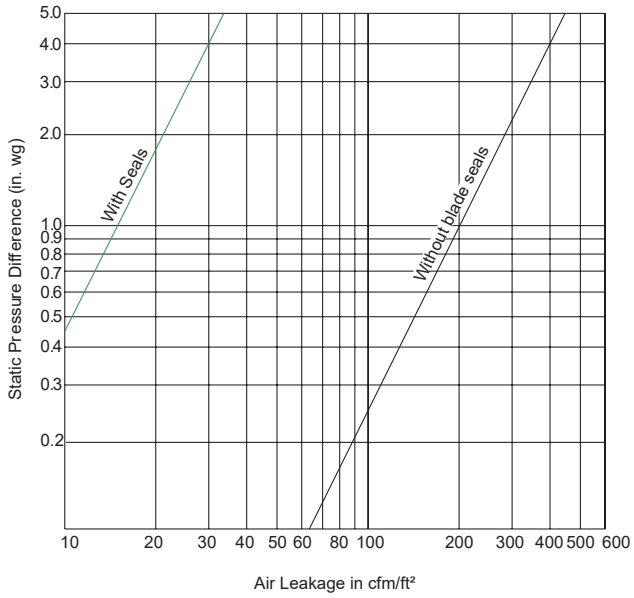

Mounting Holes

The recommended bolt hole pattern is shown in the table below. Customer must specify bolt holes that are straddling centerline or on centerline as shown in the diagrams below. The factory can also provide bolt hole sizes and patterns other than those shown.

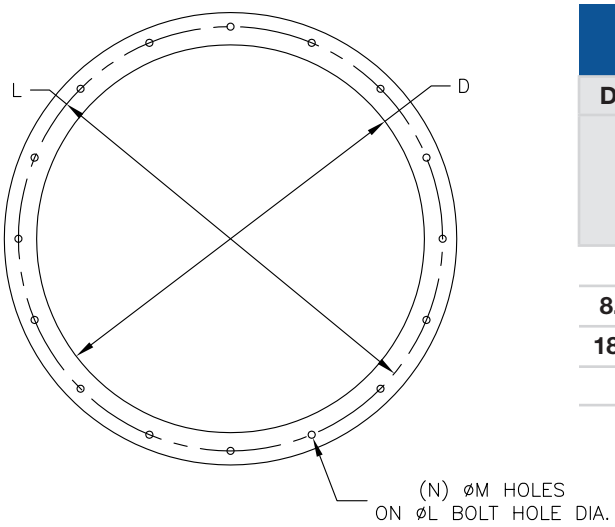

Recommended Bolt Hole Pattern (Bolt Holes Parallel to Axle Centerline)					
Diameter Inches (mm)		Number of Holes	Mounting Hole Diameter in. (mm) N	Bolt Circle Diameter L	Degrees Between Holes
From	To				
6 (152)	8 (203)	4	⅜ (9.5)	*	90
8.001 (203)	18 (457)	8	7⁄16 (11)	*	45
18.001 (457)	24 (610)	12	7⁄16 (11)	*	30
* Bolt Circle Diameter = Damper Diameter + Flange Height + ¼ in. (6 mm)					

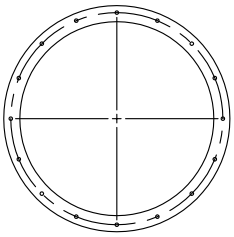

On Centerline

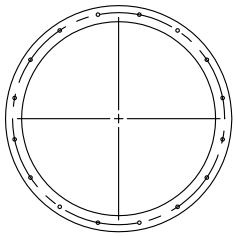

Straddle Centerline

Document Links

INSTALLATION

CATALOG

SELECTION GUIDE

DAMPER SELECTION GUIDE

SPECIFICATIONS

WARRANTY

GREENHECK
P.O. Box 410 • Schofield, WI 54476-0410 • 715.359.6171 • greenheck.com

Copyright ® 2026 Greenheck Fan Corporation
HCDR-050, R12, April 2026
Greenheck Fan Corporation reserves the right to make product changes without notice